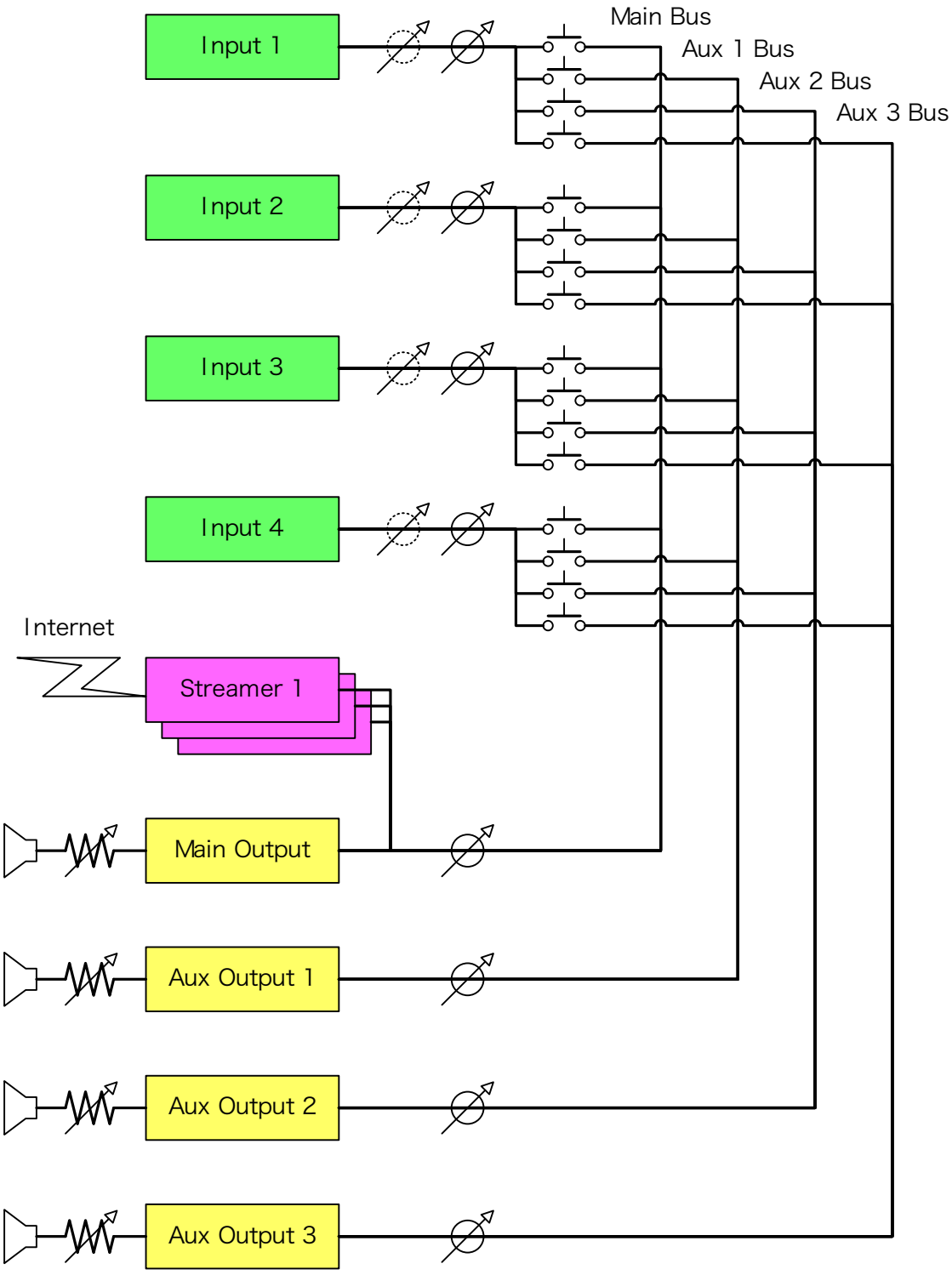
Main Bus
Aux 1 Bus
Aux 2 Bus
Aux 3 Bus
Input 1
Input 2
Input 3
Input 4
Internet
Streamer 1
Main Output
Aux Output 1
Aux Output 2
Aux Output 3